Chapter 9 - Bridge Foundation

foundation is the part constructed under the pier/abutment and over the underlying soil or rock. ... **Foundation** is the important structural part of **bridges Foundation** is the component part of **bridge** It receives the load from the piers and abutments and transfers it to the soil.

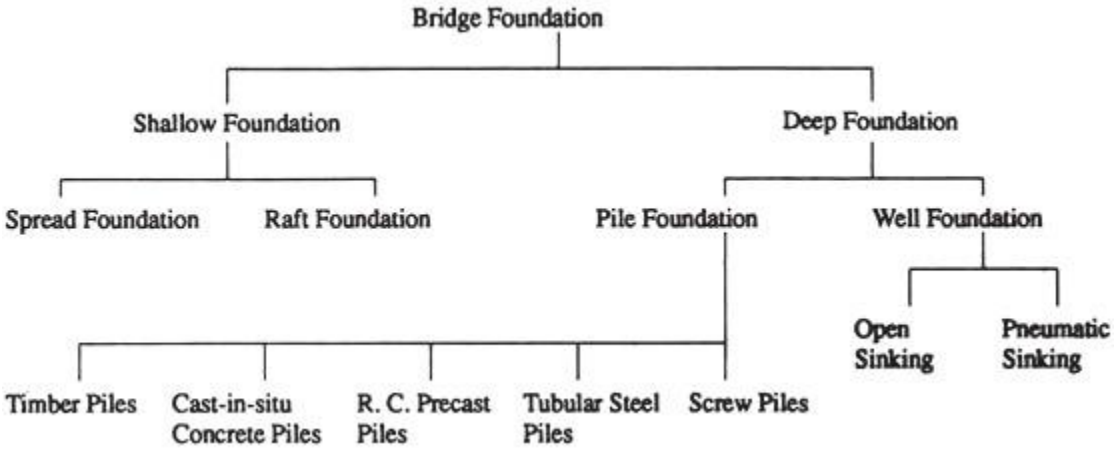

A. Shallow Foundations:
Shallow foundations are normally defined as those whose depths are less than their widths. The foundations for masonry, mass concrete or R. C. Piers and abutments of lesser heights supporting comparatively smaller spans and having no possibility of any scour are normally made shallow.

In cases, where the foundation materials are such that safe bearing capacity is very low within the shallow depth, this sort of foundations, though otherwise suitable, may not be advisable and deep foundation may be resorted to.

Design of the Footing:
If the foundation footing is subjected to direct load only, the foundation pressure may be obtained by dividing the load with the area of the raft.

If, however, it is-subjected to moment in addition to the direct load, the maximum and minimum foundation pressures are calculated as below:

$$f_{max.} = \frac{P}{A} + \frac{M}{Z} = \frac{P}{A} + \frac{P \cdot e}{Z} \qquad 1$$

$$f_{min.} = \frac{P}{A} - \frac{M}{Z} = \frac{P}{A} - \frac{P \cdot e}{Z} \qquad 2$$

Where P = direct load
A = area of foundation footing
M = moment acting on the footing
e = eccentricity of the resultant from centre line of footing
Z = Section modulus of the footing.

For rectangular footing, no tension in the foundation will develop if the resultant of the combined effect of direct load and moment remains within the middle third of the base. If the resultant falls just on the middle third line, the maximum foundation pressure in that case is equal to twice the direct pressure and the minimum equal to zero.

When the resultant exceeds the middle third line, tension develops and therefore, the entire foundation area does not remain effective in sustaining the load coming over it.

Equation (1) does no longer remain valid in estimating the maximum foundation pressure which may be done as explained below:

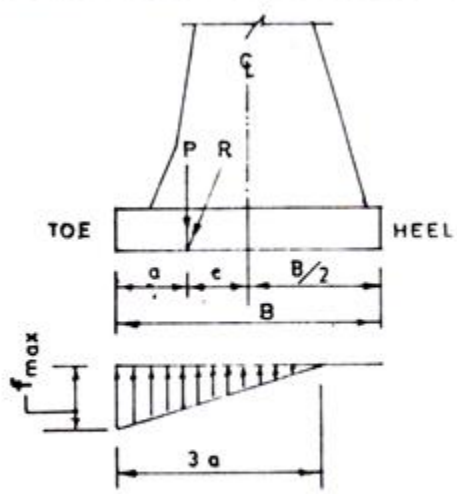

FIG. 1 FOUNDATION PRESSURE WITH RESULTANT OUTSIDE MIDDLE THIRD (Modified base area)

The point of application of the resultant is at a distance of “a” from the toe. In order to develop no tension condition on the modified effective width, the resultant must pass through the

middle third line and therefore, the effective width must be equal to “3a” to satisfy the middle third condition.

The total foundation pressure per metre length of footing must be equal to the vertical load, P, i.e., the load coming on the footing per metre length.

Assuming one metre length of wall

$$\frac{1}{2} \times f_{max} \times 3a = P \quad \therefore \quad f_{max} = \frac{2}{3} \frac{P}{a} \qquad 3$$

Generally, in foundations resting on soil, no tension is permitted. When the foundation rests on rock, tension may be allowed provided the maximum foundation pressure is calculated on the basis of the actual area carrying the load as outlined by equation (3). The foundation raft in this case needs adequate anchorage with the foundation rock by dowel bars.

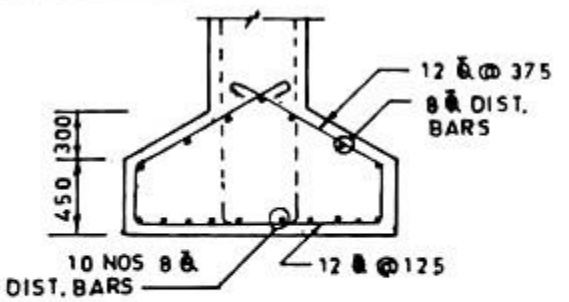

FIG. 3 DETAILS OF REINFORCEMENT FOR FOUNDATION RAFT Example 1

The stability of the structure in respect of sliding and overturning should be checked in connection with the design considerations for abutments. The adequacy of the footing may be checked in respect of moments and shears considering the soil reaction at the base as determined by the method stated previously and the weight of the soil over the footing if the latter consideration governs the design.

The reinforcement may be provided accordingly if it is of reinforced concrete.

Example 1:
Design the foundation raft of a bridge pier with a direct load of 270 tonnes and a moment of 110 tonnes metre about longer axis at the base of pier. The foundation raft rests on rock having a safe bearing pressure of 65 tonnes per square metre. Length of the raft is 7.5 m:

Solution

Assume size of raft = 7.5 m × 1.7 m ∴ Area of raft = 7.5 × 1.7 = 12.75 m^2

Section modulus of base, $Z = \frac{7.5 \times (1.7)^2}{6} = 3.61\ m^3$

Total direct load at base of raft including self weight of raft @ 10 percent = 270 + 27 = 297 tonnes.

Assuming 10 percent increase of moment at the foundation base, total moment = 110 + 11 = 121 tm.

$$\therefore\ f_{max} = \frac{P}{A} + \frac{M}{Z} = \frac{297}{12.75} + \frac{121}{3.61} = 23.29 + 33.52 = 56.81\ t/m^2$$

Allowable foundation pressure = 65.0 t/m^2, Hence safe.

$$f_{min} = \frac{P}{A} - \frac{M}{Z} = 23.29 - 33.52 = (-)\ 10.23\ t/m^2 \text{ (tension)}$$

Since the foundation raft rests on rock, tension may be permitted provided the raft is adequately anchored with the foundation rock with anchor bars and the maximum foundation pressure is calculated on the basis of effective area supporting the load.

Foundation pressure on the modified area

Eccentricity of the resultant, $e = \frac{M}{P} = \frac{121}{297} = 0.41$ m,

From Fig. 21.1, $a = \frac{B}{2} - e = 0.85 - 0.41 = 0.44$ m

Effective base width supporting the load = 3a = 3 × 0.44 = 1.32 m

From equation 21.3, $f_{max} = \frac{2}{3} \times \frac{P}{a} = \frac{2}{3} \times \frac{297}{0.44} = 60.0\ t/m^2$

Allowable foundation pressure = 65.0 t/m^2, hence safe.

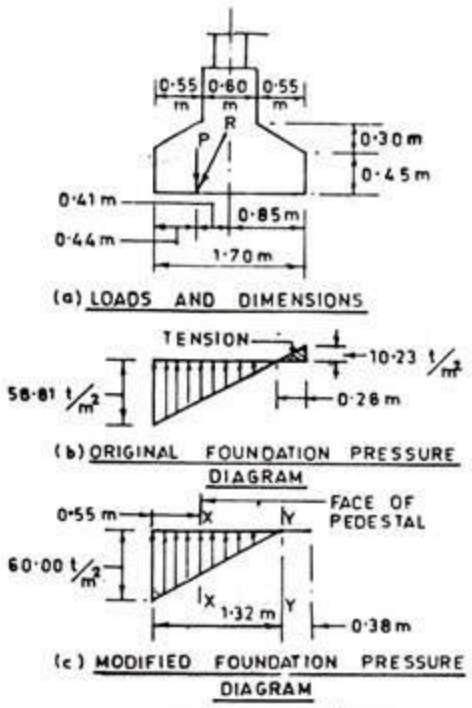

FIG. 2 FOUNDATION PRESSURE UNDER RAFT Example 1

Design of Bottom Steel

Weight of raft per $m^2 = \dfrac{27}{12.75} = 2.12\ t/m^2$

Suppose, 1.2 m height of earth acts over the foundation raft.

Load due to this = $1.2 \times 1.8 = 2.16\ t/m^2$.

Total downward load on the raft = $2.12 + 2.16 = 4.28\ t/m^2$

Foundation pressure at X-X = $60.0 \times \dfrac{(1.32 - 0.55)}{1.32} = 35.0\ t/m^2$

Moment at X-X, i.e., at the pier face due to upward reaction per metre width =

$$35.0 \times \frac{(0.55)^2}{2} + \frac{1}{2}(60.0 - 35.0) \times 0.55 \times \frac{2}{3} \times 0.55 \quad = 5.29 + 5.04 = 10.33 \text{ tm}$$

Less for downward moment due to self weight of raft and weight of earth over it $= 4.28 \times \dfrac{(0.55)^2}{2} = 0.65$ tm

$\therefore$ Nett moment = 10.33 – 0.65 = 9.68 tm = 94,900 Nm

$\sigma_c = 6.7\ MP_a$, $\sigma_s = 200\ MP_a$ & R = 0.95

$$d = \sqrt{\frac{94{,}900 \times 10^3}{0.95 \times 10^3}} = 316\ mm$$

Effective depth available with 75 mm clear cover for foundation raft and 10 mm. for half dia of bar = 750 – 85 = 665 mm. Using HYSD bars,

$$A_s = \frac{94{,}900 \times 10^3}{200 \times 0.894 \times 665} = 800 \text{ mm}^2$$

Adopt 12 Φ @ 125 (A_s = 904 mm^2)

Distribution steel = 30% of main steel = 0.3 × 800 = 240 mm^2, Use 8 Φ @ 175 (A_s = 285 mm^2)

Top Steel

Due to tension in the foundation on either side, there will not be any contact between the raft and the soil underneath and therefore, the self weight of raft and the weight of earth over it will produce downward (i.e., hogging) moment.

Hogging moment at Y-Y (Fig. 21.2-C) = $4.28 \times \frac{(0.38)^2}{2} = 0.31$ tm = 3030 Nm

Effective depth at Y-Y = 657 – 80 = 577 mm $\therefore$ $As = \frac{3030 \times 10^3}{200 \times 0.894 \times 577} = 29 \text{ mm}^2$

Every third bottom bar may be taken upwards ($A_s = \frac{1}{3} \times 904 = 300$ mm^2)

Shear

Shear stress will be much within allowable limits.

Anchor bars

Total tension on the foundation raft (Fig. 21.2-b) = $\frac{1}{2} \times 10.23 \times 0.26 \times 7.5 = 9.97$ tonnes = 97,700 N.

Area of steel required to resist the uplift = 97,700/200 = 490 mm^2
Use 4 Nos. 20 Θ on each longer side of the footing.

The details of anchorage of foundation raft are shown in Fig.4:

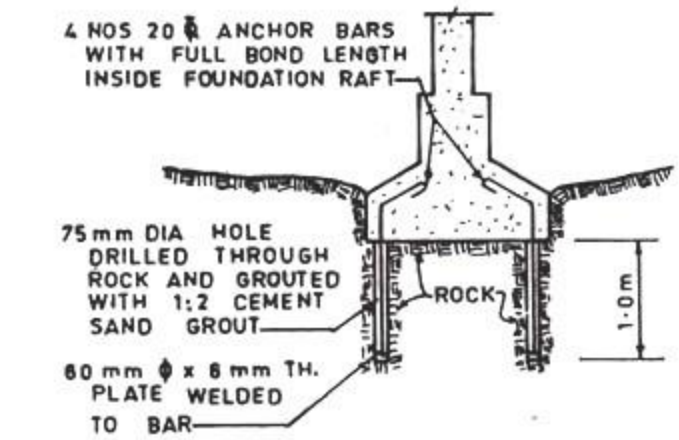

FIG. 4 DETAILS OF ANCHORAGE OF FOUNDATION RAFT IN ROCK

B. Deep Foundation:

1. Pile Foundations:

Where shallow spread or raft foundation is found unsuitable from the consideration of bearing power of the soil and where the possibility of scour of the shallow foundation is apprehended even though the foundation soil is otherwise suitable for taking the load, deep foundation is resorted to.

If the depth of scour is not appreciable and if the underlying soil for pile foundation is suitable for taking the design load, pile foundations are adopted. The pile foundations transmit the load into the underlying soils in such a manner that settlement of the foundations is not excessive and the shearing stresses in the soil are within the permissible limits after accounting for adequate factor of safety.

Piles may be classified into two groups depending on the manner by which they transmit the load into the soil viz:

(1) Friction piles and

(2) End bearing piles.

The former group of piles transmits the load into the soil through the friction developed between the entire pile surface of effective length and the surrounding soil whereas the latter group, if they are driven through very weak type of soil but resting on a very firm deposit such as gravel or rock at bottom, can transmit the load by end bearing only.

Generally, in end bearing piles, some load is transferred to the soil by friction also. Similarly, in friction piles some load is transferred to the soil by end bearing also.

Type of Piles:

Piles are of various forms and of various materials. Most common types of piles used in the construction of highway bridges are:

(a) Timber piles

(b) Concrete piles

(i) Precast

(ii) Cast in-situ

(c) Steel piles

(i) Tubular pile either empty or filled with concrete.

(ii) Screw piles.

a. Timber Piles:

Timber piles are trunks of trees which are very tall and straight the branches being stripped off. Circular piles of 150 to 300 mm. diameter are generally used but square piles sawn from the heartwood of bigger logs are sometimes utilised.

For better performance during driving, the lengths of timber piles should not be more than 20 times diameter (or width). Common varieties of Indian timbers suitable for piles are Sal, Teak, Deodar, Babul, Khair etc.

Timber piles are cheaper than other varieties of piles but they lack in durability under certain conditions of service where variation of water level causing alternate drying and wetting of the piles is responsible for rapid decay of timber piles.

If remain permanently under submerged soil, these piles may last for centuries without any decay. Timber piles may be used untreated or treated with chemicals such as creosote to prevent destruction by various bacteria or organism or decay. Timber piles are affected by marine borers in- saline water.

b. Concrete Piles:

Precast Concrete Piles:

Precast concrete piles may be of square, hexagonal or octagonal shape, the former one being commonly used for their advantage of easy moulding and driving. Moreover, square piles provide more frictional surface which helps in taking more load.

Hexagonal or octagonal piles, on the other hand, have the advantages that they possess equal strength in flexure in all directions and the lateral reinforcement may be provided in the form of a continuous spiral. Moreover, special chamfering of the comers is not required as in square

piles. Precast piles may be tapered or parallel sided with taper at the driving end only, the latter one is generally preferred.

Sections of square piles vary with the length of the piles. Some common sections used are:
300 mm square for lengths up to 12 m.

350 mm square for lengths above 12 m up to 15 m.

400 mm square for lengths above 15 m up to 18 m.

450 mm square for lengths above 18 m up to 21 m.

Normally, the lengths of square piles are kept as 40 times the side for friction piles and 20 times the side for end bearing piles.

The precast piles are made of rich concrete mix of 1: 1 ½: 3 proportion, the pile head being made with richer mix of 1: 1: 2 to resist the dynamic stresses during driving.

Longitudinal reinforcement @ 1.5 per cent to 3 per cent of the cross-sectional area of the piles depending on length to width ratio and stirrups or lateral ties not less than 0.4 percent by volume are provided. Longitudinal bars should be properly tied by the lateral ties, the spacing of which should not be more than half the minimum width.

The spacing of the lateral ties at the top and bottom of piles should be close and generally half the normal spacing's. The reinforcement provided in precast piles are provided for resisting handling and driving stresses unless they are end bearing piles in which case the reinforcement provided in the piles transmit the load as in R. C. columns.

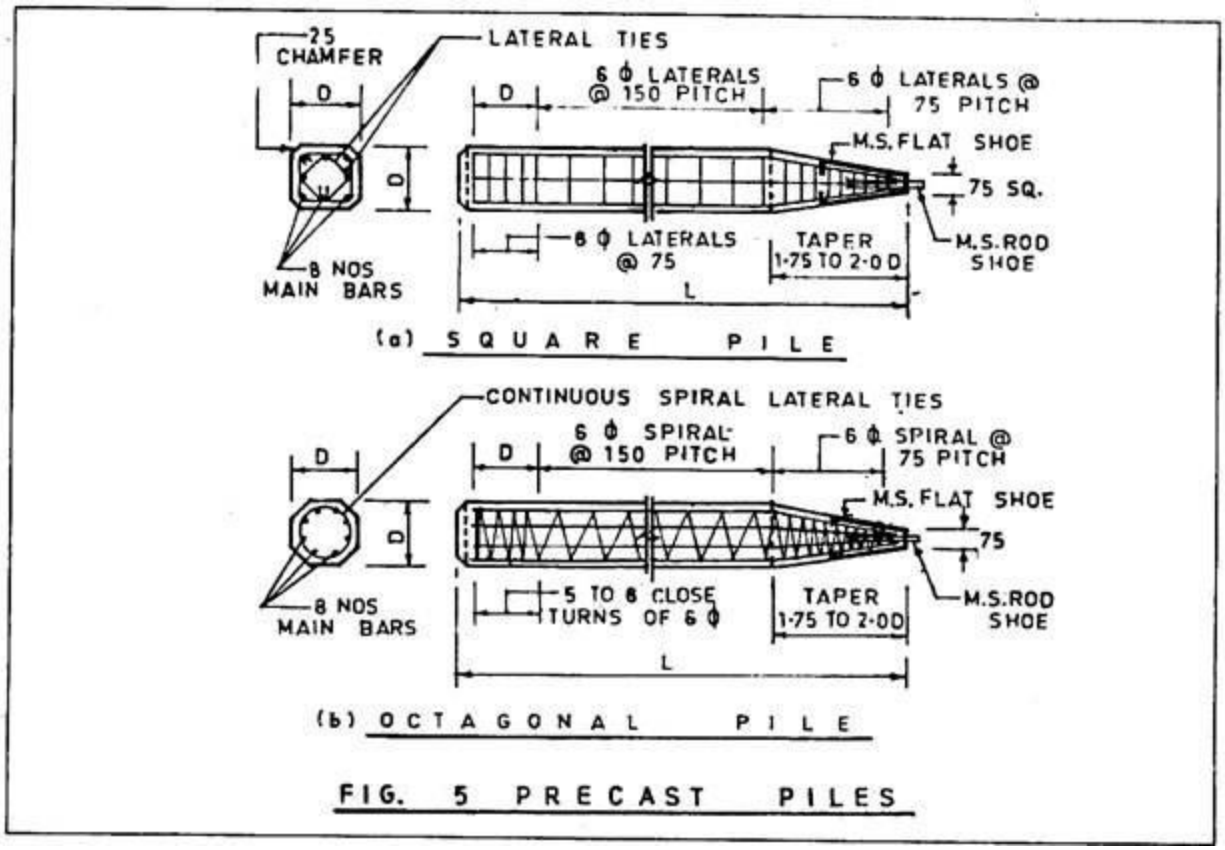

FIG. 5 PRECAST PILES

Handling and Lifting of Piles:

When precast piles are lifted, bending moment is induced in the piles due to the self-weight of the piles for which reinforcement are required in the piles to cater for these handling stresses.

To minimise the quantity of such reinforcement in piles, the lifting should be done in such a manner that the bending moments so developed should be brought to as minimum a value as possible. Two-point lifting of the piles is very common which may-be outlined as follows.

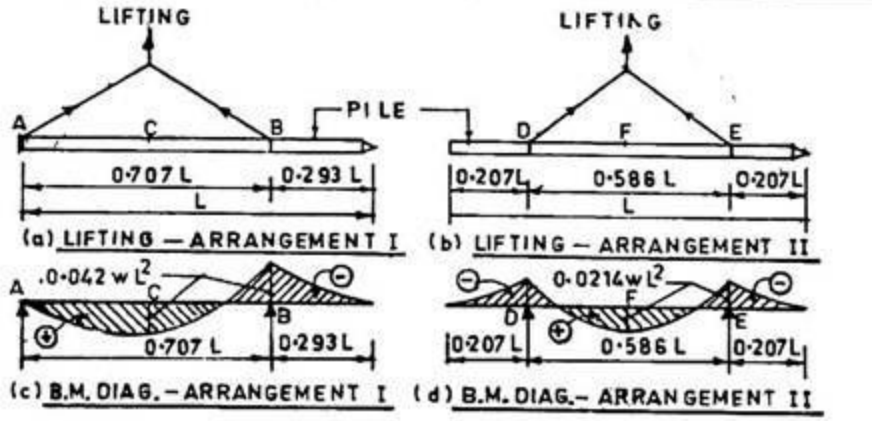

FIG. 6 DETAILS OF TWO-POINT LIFTING OF PILES

For the lifting arrangement as shown in Fig.6(a) positive moment at C must be equal to the negative moment at B. Similarly, for the lifting arrangement as in Fig. 6(b) positive moment at F must be equal to the negative at D and E. To satisfy such moment condition, the dimensions of the lifting points must be as shown in figure.

Cast-in-situ Concrete Piles (Driven or Bored):

There are many varieties of cast- in-situ piles but the main principle of making the piles is the same viz., a steel hollow pipe is either driven into or bored through the soil thus making a hollow cylindrical space into which the concrete is pored to form the cast-in-situ piles.

Cast- in-situ piles are circular piles with variable size depending on the type and load carrying capacity. Simplex piles are normally of 350 to 450 mm diameter with load carrying capacity of 40 tonnes to 80 tonnes. Franki piles, on the other hand, are of 500 mm diameter and carry a load of 100 tonnes approx.

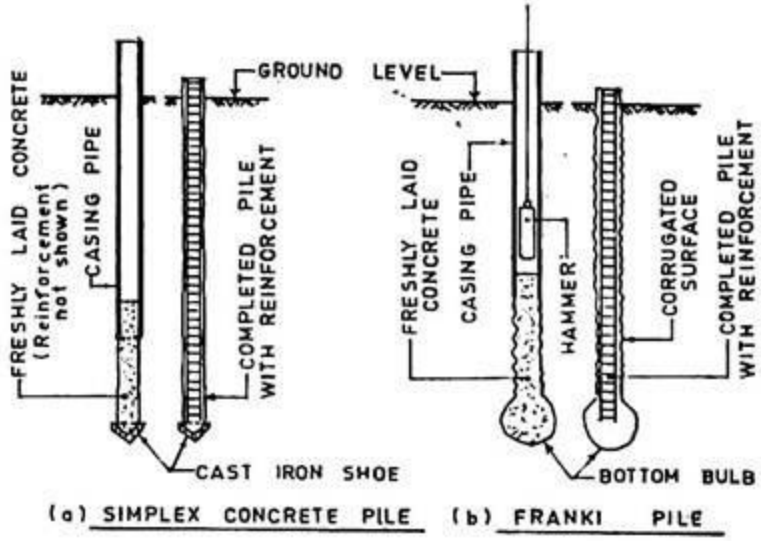

FIG. 7 CAST-IN-SITU DRIVEN PILES

In Simplex concrete piles, Fig.7(a), a cast iron shoe is used at the bottom of the casing pipe to facilitate driving of the pipe by hammering at the top with an iron hammer over a wooden dolly. When final level is reached, reinforcement cage is lowered and the concrete is poured inside the pipe filling it partly.

The pipe is slightly raised and again concrete is poured. This process is continued nil concreting of the space is completed and the casing pipe is withdrawn leaving the completed cast-in-situ pile. This pile is mainly a friction pile but some load is taken by the tip of the pile also.

The driving procedure of the casing pipe in Franki piles [Fig. 7(b)] is slightly different from that in Simplex pile. Some dry concrete is poured into the pipe which is kept standing on the ground. This dry concrete forms a plug which is rammed by a hammer cylindrical in shape moving inside the pipe.

The plug concrete grips the wall so tightly that the hammer forces down the pipe along with the plug concrete until the desired level is reached.

At this level, the plug is broken, fresh concrete is poured and it is thoroughly rammed thus spreading the concrete to form a bulb which increases the bearing area of the pile at the bottom and helps in taking more load by bearing.

As the tube is partly filled above the bulb after lowering the reinforcement cage, the tube is raised and the concrete is again rammed but with less violence than at the time of forming the bulb. This ramming makes the surface of the pile irregular in the form of corrugation which again increases the skin friction of the pile.

The process is continued till the pile is completed. This sort of pile transmits the load by both friction and end bearing.

Vibro piles are quite similar to the Simplex type and the casing pipe is driven into the ground by hammering it at top and by providing a C.I. shoe at the bottom. The principal difference in this pile is that instead of filling the pipe with concrete in stages, it is completely filled with concrete of a fairly fluid consistency.

During lifting of the casing pipe, a special type of hammer which hits an attachment of the pipe upwards is used. The vibration created by the hammer in the pipe and the static head of the fluid concrete helps to withdraw the pipe as well as to make a continuously vibrated shaft of the pile. The surface of this sort of piles is smooth and no corrugation is formed.

Bored Piles are found useful in places where the vibrations caused by the driving of the casing tube may be harmful to the neighbouring structures. These piles are cast in the hollow space made by removal of the earth by means of boring.

Precautions should be taken to prevent the incoming of the earth into the casing. Bores should also be protected from necking caused by soft soil or piles should be protected during casting from loss of cement due to movement of subsoil water.

c. Tubular Steel Piles:
Tubular piles may be driven open ended or with cast iron shoes as in casing pipe of cast-in-situ concrete piles. The piles when driven open ended are filled with soil automatically during driving. The piles with closed end may be kept empty or may be filled with concrete.

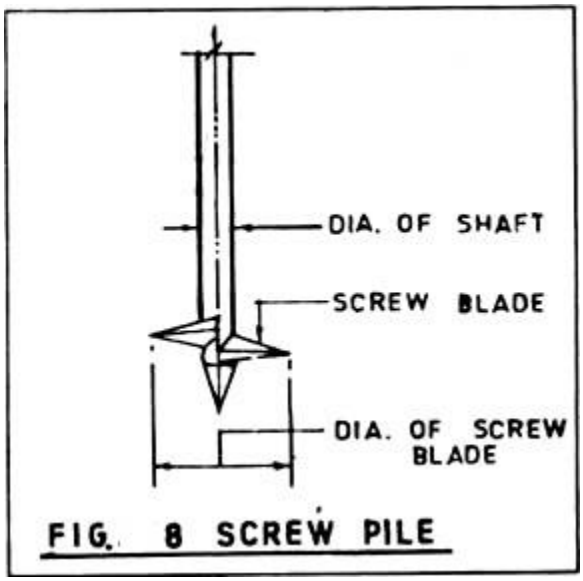

FIG. 8 SCREW PILE

Screw Piles:

A Screw pile consists of a circular steel shaft of various diameter ranging from 75 to 250 mm and ending in a large diameter screw blade at the bottom. The screw is a complete turn, the diameter of the blade being 150 mm to 450 mm.

The base area of the screw piles is installed by screwing them down by means of Capstan with long bars fitted at the top of piles with the help of manpower. Electric motors are now-a-days employed for this purpose but the use of screw piles are becoming rarer day by day.

Pile Spacing:
The recommended minimum spacing of friction piles is 3 d, where d is the diameter of circular piles or the length of the diagonal for square, hexagonal or octagonal piles. Further close spacing of the friction piles reduces the load bearing capacity of the individual pile and is, therefore, not economical.

End bearing piles may be placed closer. No limit has been fixed for the maximum spacing of the piles but it does not generally exceed 4 d.

How Load is transferred through Piles:
Friction piles:
When a load is placed on the top of a friction pile driven in granular or cohesive soil, it tends to penetrate further. This tendency of downward movement of the pile is resisted by the skin friction between the pile surface and the soil.

The magnitude of the skin friction per unit area of pile surface depends on the value of normal earth pressure p and the coefficient of friction between the soil and the pile surface; both of these values again depend on the nature of the pile surface and the nature of the soil.

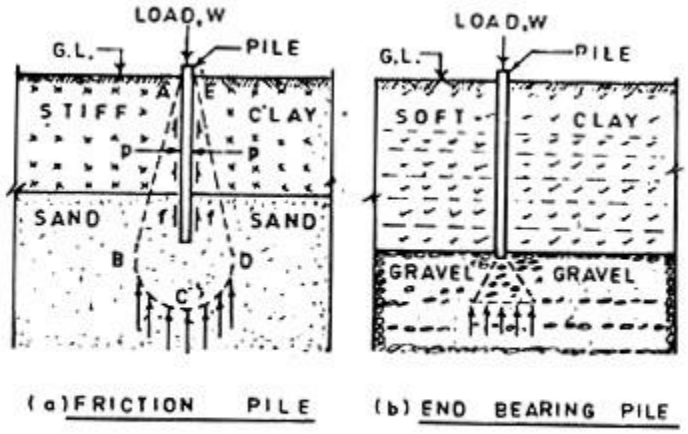

FIG. 9 LOAD TRANSFERENCE THRO' PILES (Dunham)[10]

End Bearing Piles:

End bearing piles are driven through very poor type of soil to rest on firm base such as compacted sand or gravel deposits or rock. Therefore, the friction developed between the pile surface and the soil is practically very small and the whole load is transmitted by the pile through bearing. These piles act as columns and therefore, should be designed as such.

Evaluation of Ultimate Load Bearing Capacity of Piles from Soil Test Data-Static Formula:
Piles in Granular Soils:

The ultimate load carrying capacity, Q_u of piles in granular soil may be obtained from the following formula. A factor of safety of 2.5 shall be adopted for estimating the safe load carrying capacity of piles.

$$Q_u = Q_b + Q_f \qquad 4$$

Where, Q_b = Ultimate base resistance and Q_f = Ultimate frictional resistance.

Again Q_b and Q_f are given by equations 21.5 and 21.6 respectively.

$$Q_b = A_b \times f_b = A_b\left(\frac{1}{2} d \cdot \gamma \cdot N_\gamma + P_D \cdot N_q\right) \qquad 5$$

$$Q_f = \sum_{i=1}^{i=n} A_{si}\ f_{si} = \sum_{i=1}^{i=n} A_{si}\ K \cdot P_{Di} \tan\delta \qquad 6$$

Where,

A_b	=	Plan area of the base of piles
f_b	=	Ultimate bearing capacity at the pile base
d	=	Diameter of pile in cm
γ	=	Effective unit weight of soil at pile toe in kg/cm^2
P_D	=	Effective over-burden pressure at pile toe in kg/cm^2. For piles longer than 15 to 20 times the pile diameter, maximum effective over-burden at the pile tip shall be limited to 15 to 20 times the pile diameter.
N_γ & N_q	=	Bearing capacity factor depending upon the angle of internal friction, ϕ at toe (Refer Table 21.1)
$\sum_{i=1}^{i=n}$	=	Summation for n layers in which the pile is effective.
A_{si}	=	The surface area of pile in the 'i'th strata.
f_{si}	=	Average skin friction per unit area of the pile for the 'i'th strata.
K	=	Coefficient of earth pressure usually taken as 1 to 3 for driven piles and 1 to 2 for bored piles.
P_{Di}	=	Effective overburden pressure in kg/cm^2 in 'i'th layer (i varies from 1 to n below maximum scour level or effective level)
δ	=	Angle of wall friction between pile and soil in degrees (may be taken equal to ϕ)

TABLE 21.1 BEARING CAPACITY FACTORS, N_γ AND N_q *(BIS)*[4, 7]		
Values of ϕ	Values of N_γ	Values of N_q
20°	5.39	10.0
25°	10.88	17.0
30°	22.44	28.0
35°	48.03	56.0
40°	109.41	130.0
45°	271.76	340.0

Piles in Cohesive Soils:

The ultimate load carrying capacity, Q_u' of piles in purely cohesive soils may be determined from the following formula. A factor of safety of 2.5 shall be applied for getting the safe loads on piles.

$Q_u^1 = A_b . N_c . C_b + \alpha . C . A_s$ (21.7)

Where, A_b = Plan area of the base of piles

N_c = Bearing capacity factor usually taken as 9.0

C_b = Average cohesion at pile tip in kg/cm^2

α = Reduction factor as given in table 21.2

C = Average cohesion throughout the effective length of the pile in kg/cm^2

A_s = surface area of pile shaft in cm^2

TABLE 21.2 : VALUES OF REDUCTION FACTOR, α *(BIS)*[5]			
Consistency of soil	N Value	Value of α	
		For driven piles	For bored piles
Soft to very soft	< 4	1.0	0.7
Medium	4 to 8	0.7	0.5
Stiff	8 to 15	0.4	0.4
Stiff to hard	> 15	0.3	0.3

Example 2:

Evaluate the safe bearing capacity of the bored piles 500 mm. dia and 22.0 m length embedded in a mixed type soil under a viaduct structure. The bore-log at the site of work is given below:

Depth below G.L.	Unit weight, γ	Values of	
		ϕ (degrees)	C (kg/cm^2)
0 — 5 m	1.8 t/m^3	10	0.25
5 — 10 m	-do-	10	0.25
10 — 15 m	-do-	10	0.25
15 — 20 m	-do-	15	0.20
20 — 25 m	-do-	20	0.15
25 — 30 m	-do-	30	0

Solution

Since the soil is mixed soil, the ultimate bearing capacity of the piles is estimated separately for the given values of ϕ and C.

Assuming the thickness of pile cap as 1.0 m and the top of pile cap 0.3 m below G. L., the depth of the pile tip is (0.3 + 1.0 + 22.0) = 23.3 m from G. L.

From equations, 21.4 to 21.6, $Q_u = A_b\left(\frac{1}{2}d \cdot \gamma \cdot N_\gamma + P_D \cdot N_q\right) + \sum_{i=1}^{i=n} A_{si} K \cdot P_{Di} \cdot \tan\delta$

Where,

A_b = $\frac{\pi}{4} \times (50)^2 = 1963.75$ cm^2

d = 50 cm

γ = Submerged weight of soil = (1.8 – 1.0) t/m^3 = 0.8×10^{-3} kg/cm^3

Assuming linear variation, the value of ϕ at pile tip at a depth of 23.3 m below G. L. = 26 degrees.

$\therefore$ N_γ and N_q from Table 1 are 13.19 and 19.2 respectively.

$P_D = \gamma \times$ depth of pile tip from G. L. $= 0.8 \times 10^{-3} \times 23.3 \times 100 = 1.86$ Kg/cm^2 but depth of overburden limited to 20d i.e., $P_D = 0.8 \times 10^{-3} \times 20 \times 50 = 0.8$ kg/cm^2

$\Sigma A_{si} = \pi \times 50 \times 22.0 \times 100 = 3{,}45{,}620$ cm^2; $\delta = \phi$ at top $= 10°$ and $\delta = \phi$ at tip of pile $= 26°$

Average value of $\tan \delta = \frac{1}{2}(0.1763 + 0.4877) = 0.33$; K = Average value of 1 and 2 i.e. 1.5

P_{Di} at mid depth $= 0.8 \times 10^{-3} \times \frac{23.3 \times 100}{2} = 0.93$ kg/cm^2

$$\therefore Q_u = 1963.75\left(\frac{1}{2} \times 50 \times 0.0008 \times 13.19\right) + 0.8 \times 19.2 + 3{,}45{,}620 \times 1.5 \times 0.93 \times 0.33$$

$$= 1963.75\,(0.2638 + 15.36) + 1{,}59{,}100 = 30{,}680 + 1{,}59{,}100 = 1{,}89{,}780 \text{ kg} = 189.78 \text{ tonnes.}$$

From equation 21.7, $Q_u^1 = A_b \cdot N_c \cdot C_b + \alpha \cdot C \cdot A_s$

A_b as before $= 1963.75$ cm^2; $N_c = 9.0$; $C_b = 0.15$ kg/cm^2

α from Table 21.2 may be taken as 0.5 ; C (average) for the entire depth $= 0.22$ kg/cm^2

A_s = As before $= 3{,}45{,}620$ cm^2

$$\therefore \quad Q_u' = 1963.75 \times 9.0 \times 0.15 + 0.5 \times 0.22 \times 3{,}45{,}620 = 2651 + 38{,}018 = 40{,}669 \text{ kg} = 40.67 \text{ tonnes.}$$

Total ultimate capacity $= Q_u + Q_u' = 189.78 + 40.67 = 230.45$ tonnes.

Therefore, applying a factor of safety of 2.5, the safe bearing capacity Q of the piles is $\frac{230.45}{2.5} = 92.18$ tonnes, say 90 tonnes.

Spacing of Piles:

In case of piles founded on very hard stratum and deriving their load bearing capacity mainly from end bearing, minimum, spacing of such piles shall be 2.5 times the diameter of piles.

Friction piles derive their load bearing capacity mainly from friction and as such shall be spaced sufficiently apart since the cones of distribution or the pressure bulbs of adjacent piles overlap as shown in Fig. Generally, the spacing of friction piles shall be minimum 3 times the diameter of piles.

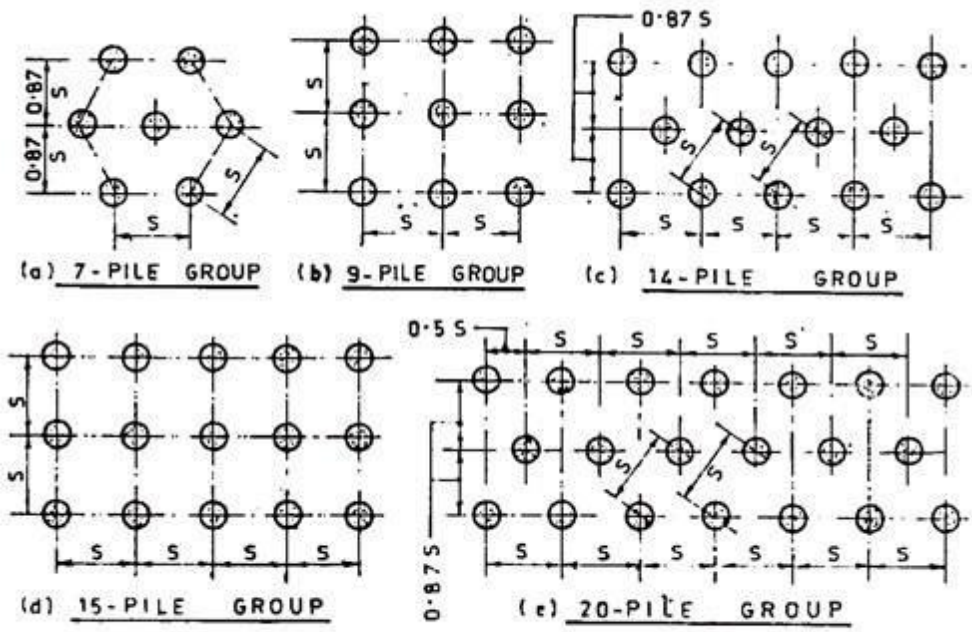

FIG. 10 TYPICAL ARRANGEMENT OF PILE GROUPING (Teng)[19]

Driving of Piles:
Piles are driven by means of either drop hammer or steam hammer. The hammer is supported by a special frame known as pile-driver which consists of a pair of guides. The hammer moves within the guides and falls from the top of the guide on die top of the piles to be driven.

The hammer which is lifted by manual labour or by mechanical power and is then released to fall freely by gravity is known as drop-hammer. Now-a-days steam hammers are used for pile driving.

The steam hammer which is lifted by the; steam-pressure and is then allowed to fall freely is a single acting steam hammer but the one which is also acted on by the steam-pressure during downward movement and adds ;o the driving energy s known as double acting-steam hammer.

Load Test on Piles:
The pile formulae both, static and dynamic, given in the previous articles predict approximately the safe load the piles will carry but it is always desirable to verify the load carrying capacity of the piles by load tests.

Initial Tests and Routine Tests:
There shall be two categories of test piles, viz., initial tests and routine tests. Initial tests are earned out on test piles at the beginning prior to driving of working piles to determine the length of piles to sustain the design load, initial test shall be carried out on minimum two piles.

Routine tests are earned out on working piles to verify the capacity of piles as obtained by initial tests. While initial tests may be conducted on single pile, the routine tests may be carried out on single pile or a group of piles, two to three in number.

The latter is preferable since the load carrying capacity of piles in a group is less specially in clayey soils and mixed soils. Routine tests shall be carried out on 2 percent of the piles used in the foundation.

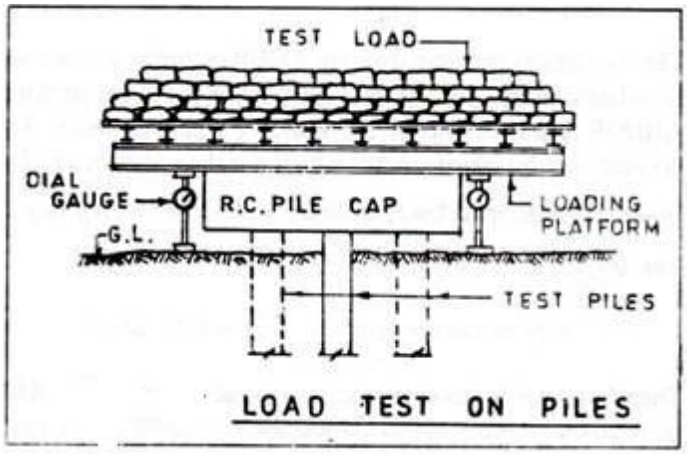

Procedure for Vertical Load Tests:
The test load may be applied in stages directly over a loading platform as shown in Fig. 21.18 or by means of hydraulic jack with pressure gauge and remote control pump, reacting against a loading platform similar to Fig.

The difference between the former and the latter method is that while all the test load placed on the platform is transferred on the test piles in the former method, the reaction of the jack is only transferred as load on the piles in the latter method though the load on the platform normally exceeds the required reaction.

Pile testing by reaction method may also be done by taking advantage of the adjacent piles which give the required jack reaction by negative friction. For testing of piles by direct loading method, R. C. pile caps are usually provided on the top of piles for using it as loading platform as well as for transferring the load on the piles uniformly.

Procedure for Lateral Load Tests on Files:
Lateral load tests may be conducted by jack reaction method with the hydraulic jack and gauge in between two piles or two groups of piles. The reaction of the jack as indicated by the gauge is the lateral resistance of the pile of the pile group.

Application of Test Loads, Measurement of Displacements and Assessment of Safe Loads tor Vertical Load Tests:

(a) For Initial Load Test:
The test loads shall be applied in increments of about 10 per cent of the test loads and measurements of displacements shall be done by three dial gauges for single pile and four dial gauges for a group of piles. Each stage of loading shall be maintained till the rate of settlement is act more than 0.1 mm per hour in sandy soils and 0.02 mm per hour in clayey soils or a maximum of 2 hours whichever is greater.

The loading shall be continued up to the test load which is twice the safe load safe load as estimated by using static formula or the load at which the total displacement of the pile top equals the following specified value:

The safe load on single pile shall be the least of the following:
(i) Two-third of the final load at which the total settlement attains a value of 12 mm.

(ii) Fifty per cent of the final load at which the total settlement equals 10 per cent of the pile diameter.

The safe load on groups shall be the least of the following:
(i) Final load at which the total settlement attains a value of 25 mm.

(ii) Two-third of the anal load at which the total settlement attains a value of 40 mm.

(b) For Routine Load Tests:
Loading shall be carried out to one and half times the safe load or up to the lead at winch the total settlement attains a value of 12 mm for single pile and 4C mm for group of piles whichever is earlier.

The safe load shall be given by the following:
(i) Two-third of the final load at which the total settlement attains a value of 12 aim for single pile.

(ii) Two-third of the final load at which the total settlement attains a value of 40 mm for a group of piles.

Loading etc. for Lateral Load Tests:
The loading shall be applied in increments of about 20 per cent of the estimated safe load after the rate of displacement is 0.5 mm per hour in sandy soils and 0.02 mm in clayey soils or 2 hours whichever is earlier.

The safe lateral loads shall be taken as the least of the following:
(a) 50 per cent of the total load at which the total displacement is 12 mm at the cut off level.

(b) Total load at which the total displacement is 5 mm at the cut-off level.

Pull-out Tests on Piles:
For this test, clause 4.4 of "1S:2911 (Part IV)—1979: Code of Practice for Design and Construction of Pile Foundations— Load Tests on Piles" shall be referred.

Cyclic Load Tests & Constant Rate of Penetration Tests:
Pile-Cap:
R. C. Pile – caps of adequate thickness are required to be provided on the top of piles to transfer the load from the structure on to the piles.

The pile- caps are designed on the following principles:
(i) Punching shear due to load on the piers or columns or on the individual piles.

(ii) Shear at pier or column face.

(iii) Bending of the pile cap about the pier or column face.

(iv) Settlement of one row of piles and the consequent bending and shear of the pile cap.

An off-set of 150 mm shall be provided beyond the outer faces of the outermost piles in the group. When the pile cap rests on ground, a mat concrete (1:4:8) of 80 mm thickness shall be provided at the base of the pile cap.

The top of pile shall be stripped of concrete and the reinforcement of the pile shall be adequately anchored into the pile cap for effective transmission of the loads and moments to the ground through the piles. At least 50 mm length of the pile top after stripping of concrete shall be embedded into the pile cap. The clear cover for main reinforcement shall not be less than 60 mm.

Pile Reinforcement:
The area of longitudinal reinforcement in precast piles shall be as below to withstand the stresses due to lifting, stacking and transport.

(i) 1 .25 per cent for piles having a length less than 30 times the least width.

(ii) 1.5 per cent for piles having a length greater than 30 and up to 40 times the least width.

(iii) 2.0 per cent for piles having a length exceeding 40 times the least width.

The area of longitudinal reinforcement in driven cast-in-situ and bored cast-in-situ concrete piles shall not be less than 0.4 per cent of the shaft area.

Lateral reinforcement in piles shall not be less than 0.2 per cent of the gross volume in the body of the piles and 0.6 per cent of the gross volume in each end of the pile for a distance of about

3 times the least width or diameter of the piles. The minimum dia. of the lateral reinforcement shall be 6 mm.

2. Well Foundations:

Where pile foundations are unsuitable due to site conditions, the nature of the soil strata or for the reason of comparatively deep scour, well foundations are adopted. The components of a well are shown in Fig. 21.19.

Cutting Edge and Well Curb:

At bottom, wells are provided with a steel cutting edge made of m.s. plates and angles riveted or welded together and anchored into the well curb by means of anchor bars. Concrete well curbs are triangular in section in order to assist in removing the earth by grabbing and to help easy sinking of the wells.

The inclination of the well curb should not exceed 35 degrees with the vertical. These curbs are properly reinforced so as to make it strong enough to resist the stresses during sinking. Usually reinforcement both in the form of stirrups and longitudinal bars are provided not less than 72 kg. per cu. m. excluding bond rods of steining.

Link bars are used to keep the longitudinal bars and stirrups in position. The concrete to be used in the well curbs shall generally be of grade M20.

Where pneumatic sinking is to be adopted, the internal angle of the well curbs shall be steep enough for easy access of the pneumatic tools. In case, blasting is to be resorted to sink the wells, the full height of the internal face and half height of the external face of the curb shall be protected with m.s. plate of 6 mm thickness properly anchored to the curb by anchor bars.

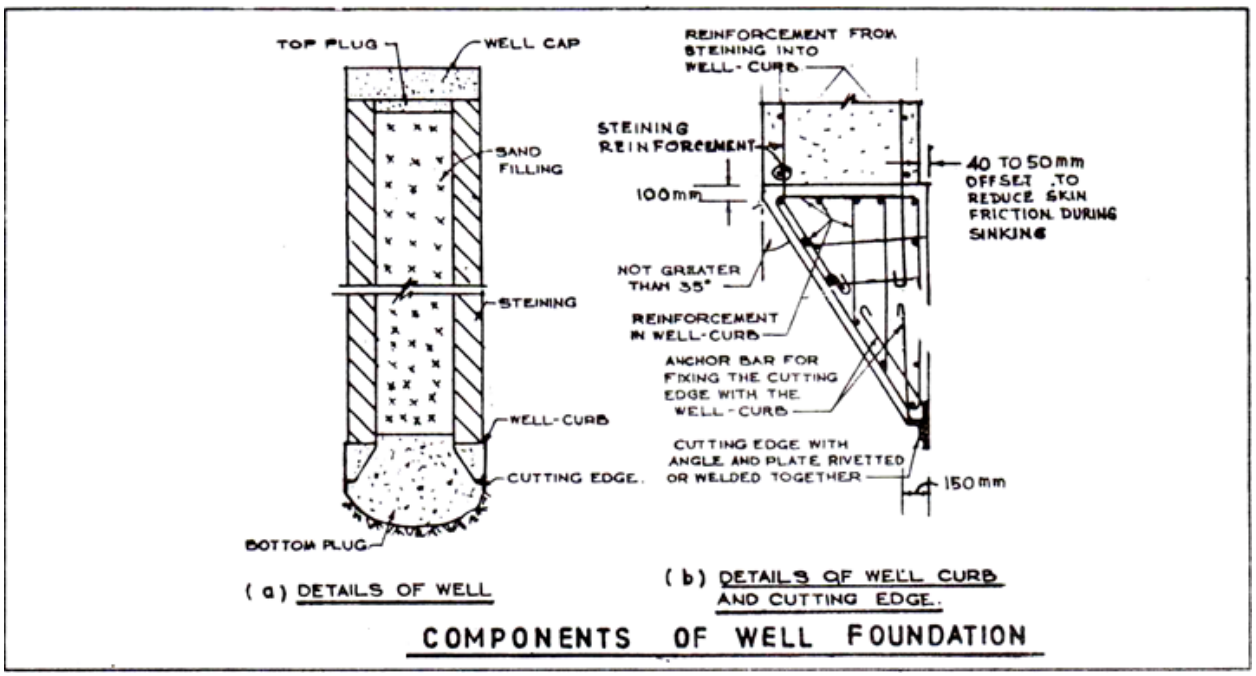

Steining:
The steining is made of brick or stone masonry or of mass concrete. Nominal reinforcement shall not be less than 0.12 per cent of gross sectional area of steining to resist the tensile stress that may be developed in the well steining in case top portion of the steining is stuck to a layer of stiff clay and the remaining portion is hung from top. Two layers of vertical steining bars with binders are preferred to one central layer only.

In case of brick steining, vertical bond rods shall be provided at the middle of the steining at a rate not less than 0.1 per cent of the gross steining area. These bars shall be encased with concrete of M20 grade within a column, of 150 x 150 size.

These columns shall be used with R C. bands of suitable width not less 300 mm and of 150 mm depth. The spacing of such bands shall be 3 m or 4 times the thickness of the steining whichever is less

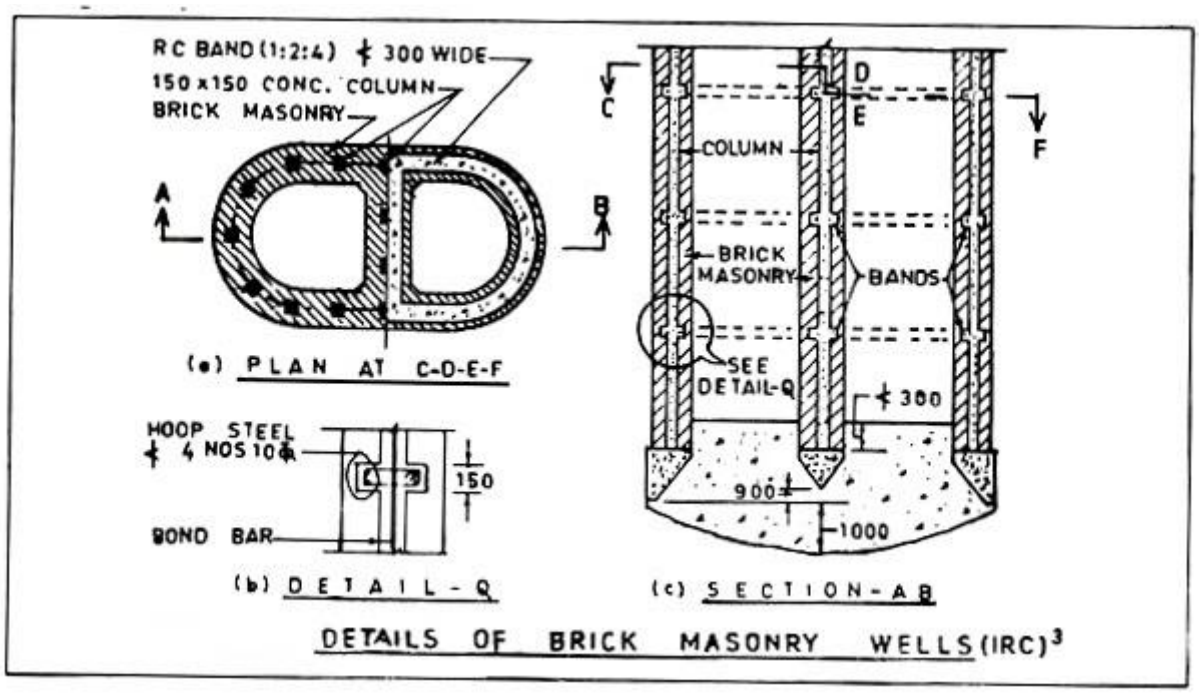

DETAILS OF BRICK MASONRY WELLS (IRC)[3]

Bottom Plug:
When the sinking is completed and the founding level is reached the wells after making the necessary sump are plugged with 1: 2: 4 concrete. This is usually to be done under water for which special type of equipment's are to be used in order to protect the concrete from being washed away when taken through water. For this purpose, two methods are commonly used.

The first method is known as "Chute method" or "Contractor's method' in which some steel pipes usually known as tremie 250 mm to 300 mm diameters' with funnel at top are placed inside the wells. The top of these pipes is kept above water level and the bottom at the bottom level of well .

The concrete when poured in the funnel, moves downwards due to gravity and reaches the bottom. The pipes are shifted sideways as the concreting proceeds.

In the second method, a more or less water-tight box is used for under-water concreting. The bottom of the box is made such that when the box reaches the plugging level, the bottom of the box is opened downwards by releasing a string from above and the concrete is placed at the bottom of the well. This method is known as “Skip box” method.

The function of the bottom plug is to distribute the load from the piers and abutments on to the soil strata below through the well steining. The load from the piers and abutments distributed over the well-cap and then to the well steining finally reaches the well curb.

Having a tapered side in contact with bottom plug, the load from the curb is ultimately transferred to the bottom plug arid then onto the soil below. For better performance, the bottom plug shall have adequate thickness as shown in Fig.(c)

Sand Filling:
The well pockets are usually filled with sand or sandy clay but sometimes the pockets are kept empty to reduce the dead load of well on the foundation. It is desirable that at least the portion of the pockets below maximum scour level should be filled with sand for stability of the wells. In each case, a top plug is provided over the sand filling.

Well-Cap:
Load from the piers and abutments are transferred to the well-steining through the well-caps which should, therefore, be reinforced adequately to withstand the resulting stresses caused by the superimposed loads and moments.

Shapes of Wells:
Wells of various shapes are used depending on the type of soil through which they are to be sunk, the type- of pier to be supported and the magnitude of the loads and moments for which they are to be designed. The following shapes, as shown in Fig. 21.21 are very common:

Double-D octagonal or dumb-bell shaped wells have generally twin pockets or dredge holes due to which greater control over the shifts and tilts of wells is possible.

In addition dumb-bell shaped wells offer greater resistance to tilting in the longitudinal direction but while brick or concrete can be used in the construction of well-steining in both the double-D or octagonal wells, labour cost is more if brick-steining is used in dumb-bell wells.

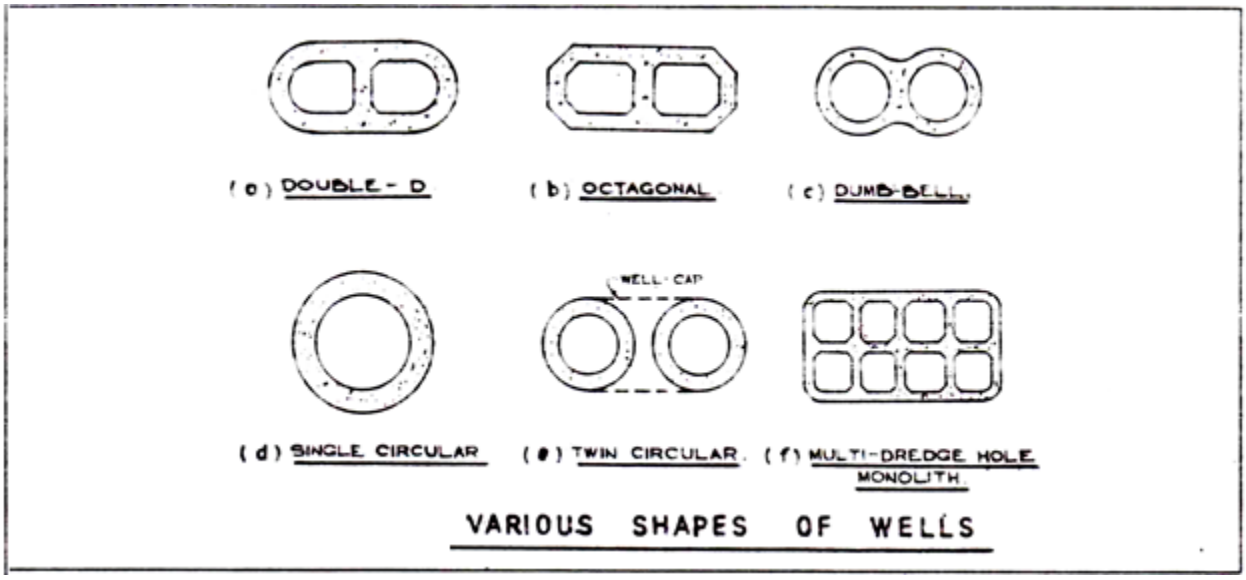

Single circular wells are most economical where the moments in both the longitudinal and transverse directions are more or less equal. Moreover, for the same base area, these wells have lesser frictional surface on account of which lesser total sinking effort is required to sink the wells.

Twin-circular wells are more or less similar to single circular wells but these are suitable where the length of pier is more but twin-circular wells are not favoured where possibility of differential settlement between the two wells is not over-ruled. Both brick and concrete may be used in the steining of circular wells

Multi-dredge hole wells or monoliths are adopted in supporting piers or towers of long span bridges. This son of monoliths was used in supporting the main towers of Howrah Bridge at Calcutta. The size of the monolith was 55.35 m x 24.85 m with 21 dredging shafts each 6.25 m square.

Depth of Wells:

It deciding the founding levels of wells, the following points should be duly considered:

(i) The minimum depth of well is determines from the considerations of maximum scour so as to get the minimum grip length below the maximum scour level for the stability of the well.

(ii) The foundation may have to be taker deeper if the soil at the founding level is nor suitable to bear the design load.

(iii) Passive resistance of earth on the outside of well is taken advantage of in resisting as far as possible the external moments acting on the well due to longitudinal force, water current, seismic effect etc. The earth below the maximum scour level is only effective in offering the passive resistance.

Where greater external moments are required to be resisted by the passive earth pressure, greater grip length below the maximum scour level is required and therefore, to achieve this, further sinking of the well is necessary.

Design Considerations:

The external moments acting on the wells due to various horizontal forces and the eccentric direct load are resisted by the moment due to passive earth pressure partly of fully depending on the magnitude of the passive pressure available which again is related to the area and nature of soil offering the passive resistance. The balance external moment if there be any, comes to the base.

The foundation pressure at the base of the well may, therefore, be calculated by the formula:

$$f_b = \frac{W}{A} \pm \frac{M}{Z}$$

Where, W = Total vertical direct load at the base of well after due consideration of the skin friction on the sides of wells.

A = Bases area of the well.

M = Moment at base.

Z = Section modulus of base.

The foundation pressure will be maximum when both W and M are maximum. This condition is reached when the live load reaction on the pier is maximum and no buoyancy acts on the well and the pier.

On the other hand, the minimum foundation pressure and the possibility of tension or uplift may be expected when the live load reaction is minimum and full buoyancy acts due to which the dead weight of pier and well is reduced. The foundation pressure should be such that it remains within the permissible bearing power of the soil.

The skin friction acting on the sides of the wells is taken into account in balancing part of the direct load. In estimating the steining thickness, it is necessary to find out the maximum moment as well as the maximum and minimum direct load on the steining.

The steining thickness should be such that both the maximum and minimum stresses remain within the permissible value. In getting the maximum and minimum stresses, the considerations made in case of foundation pressure as outlined above should be tried here also.

$$f_s = \frac{W}{A} \pm \frac{M}{Z}$$

Where, W = Total vertical load on the steining section under consideration.

A = Area of steining.

M = Moment at the steining section.

Z = Section modulus of the steining section.

The stability of well foundations shall be checked taking into account of all possible loading combinations including buoyancy or no buoyancy condition. Foundations for pier wells in cohesion less soil shall be designed on the basis of the **"Recommendations for Estimating the Resistance of Soils below the Maximum Scour level in the Design of Well Foundations of Bridges".**

Design of abutment wells in all types of soils and pier wells in cohesive soils shall be done in accordance with the recommendations "Foundations and Substructure". Method of checking the stability of wells in predominantly clayey soil is explained below following the recommendations.

The active and passive earth pressure at any depth Z below the maximum scour level for a mixed type soil is given by:

$$6_a = \frac{\gamma Z}{N_\Phi} - \frac{2C}{\sqrt{N_\Phi}}$$

$$6_p = \gamma \cdot Z \cdot N_\Phi + 2C\sqrt{N_\Phi}$$

Where,

6_a = Active earth pressure per unit area of vertical section.
6_p = Passive earth pressure per unit area of vertical section.

C = Cohesion per unit area
N_Φ = $\tan^2\left(45^\circ + \frac{\Phi}{2}\right)$
Φ = Angle of internal friction
γ = Unit weight of soil (submerged weight when under water).

For purely cohesive soils with $\Phi = 0$, equations 21.20 and 21.21 reduce to

$$6_a = \gamma Z - 2C$$

$$6_p = \gamma Z + 2C$$

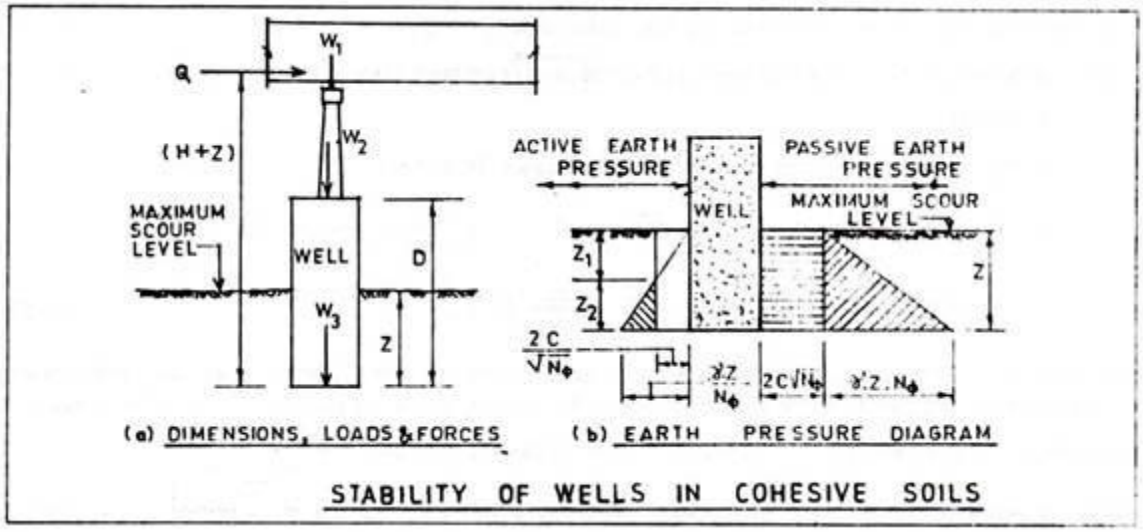

shows a well subjected to vertical concentric load W (= $W_1 + W_2 + W_3$) and a horizontal force Q acting at a distance H from maximum scour level. Fig.(b) shows the active and passive pressure diagrams based on equations and also considering rotation at the base as recommended.

Thickness of Well-Steining:

The thickness of well-steining should be such that it can withstand the stresses developed due to loads and moments during service of the bridge. These stresses may be calculated by the procedure given previously.

It is often observed that though the steining thickness satisfies all the loading conditions during service but it presents difficulties during sinking of the well. In such cases, either the steining becomes too light to give any sinking effort without addition of kentledge over the steining or failure of the steining occurs during sinking operation.

"Sinking effort" may be defined as the weight of the steining including kentledge, if any, per unit area of well periphery offering skin friction by the surrounding soil.

$$\text{Sinking effort} = \frac{2\pi r t w}{2\pi R} = \frac{w r t}{R}$$

Where, r = Radius of the centre line of the steining.

t = Steining thickness.

w = Unit weight of steining.

R = Outer radius of well steining.

Unless the sinking effort exceeds the skin friction offered per unit area of steining surface, the sinking of the wells is not possible and therefore, the steining thickness should be made such

that by adding small amount of kentledge, if necessary, the required amount of sinking effort is available in sinking the wells.

In order to make economy in the well steining, it is sometimes preferred by some designers to adopt the in steining thickness as per theoretical calculation just sufficient for taking design loads during service of the bridge but this economy or saving in the steining is more than compensated by the additional cost of loading and unloading of the kentledge, increased cost of establishment charges due to delay in sinking the wells etc.

According to Salberg, a practical Railway Engineer, this sort of economy aimed at by reducing the steining thickness is a false economy. His advice is —

"The really important factor in well design is the thickness of the steining. It is regrettable feature that in most design, the steining thickness is cut down to what the designer fondly imagines is something really cheap ; money is saved on paper and in the estimate in the reduction of considerable masonry but in actual work it is all thrown away in the increased cost of sinking. A well that is too light in itself has to be loaded and the cost and delay of a well that has to be loaded to be sunk is terrible. You have nothing permanent for all the money you have spent in loading and unloading a well. Put your money into the steining and you have good money well spent and a solider and heavier well under your pier forever. The chances are that you will save money on the job as a whole, you will save time and labour both important features, particularly the former when it is remembered that the period during which well can be worked at is limited to the low level duration of the river".

Empirical formula governing the thickness of steining for circular wells as required from sinking considerations is given below. This formula may be applicable to double-D or dumb-bell shaped wells also if the individual pocket is assumed to be a circular well of equivalent diameter.

$$t = k \cdot d \cdot \sqrt{D}$$

Where,

t = Thickness of well steining in metres
d = External diameter of circular well or dumb-bell well or smaller dimension of double-D well in metres
D = Depth of well in metres below L.W.L. or G.L. whichever is higher
K = A Constant the value of which is given in Table 21.3

TABLE 21.3 : VALUES OF K IN EQUATION 21.30 *(IRC)*[3]

Type of Well	Concrete Steining		Brick Steining	
	Sandy Soil	Clayey Soil	Sandy Soil	Clayey Soil
Single circular or dumb-bell shaped	0.030	0.033	0.047	0.052
Double-D	0.039	0.043	0.062	0.068

Note 1:
For boulder strata or for wells resting on rock where blasting may be required, higher thickness of steining may be adopted.

Note 2:
For wells passing through very soft clayey strata, the steining thickness may be reduced based on local experience.

Sinking of Wells:
The principal features in the sinking of wells are:
(a) To prepare the ground for laying the cutting edge.

(b) To cast the well-curb after laying the cutting edge.

(c) To build the steining over the well-curb.

(d) To remove the earth from the well pocket by manual labour or by grabbing and thus to create a sump below the cutting edge level. The well will go down slowly

(e) To continue the process of building up the steining and the dredging in alternate stages. Thus the well sinks till the final founding level is reached.

(f) If necessary, kentledge load may be placed on the well steining to increase the sinking effort for easy sinking of the wells.

In preparing the ground for the cutting edge, it is not a problem when the location of the well is on a land or on a dry river bed but when the well is to be sited on the river bed with some depth of water, some special arrangements are to be made for laying the cutting edge depending upon the depth of water.

These are:
(a) Open islanding.

(b) Islanding with bullah cofferdam.

(c) Islanding with sheet-pile cofferdam.

(d) Floating caisson.

(a) Open Islanding (Fig. 21, 24-a):
When the depth of water is small say 1.0 m to 1.2 m. earth is dumped and an island is made such that its finished level remains at about 0.6 m to 1.0 m higher than the W.L. and sufficient working space (say 1.5 m to 3.0 m) round the cutting edge is available.

(b) Bullah Cofferdam (Fig.b):
When the depth of water exceeds i.2 m but remains within 2.0 m to 2.5 m, cofferdam is made by driving close salbullah piles and after placing one or two layers of durma mat, the inside is filled with sand or sandy earth.

Sometimes, two rows of bullah piles at a distance of about 0.6 m between the rows are used and the annular space is filled with puddle clay. The unity of the inside and the outside rows being tied together gives more rigidity. This sort of islanding is adopted in comparatively deep water.

(c) Sheet Pile Cofferdam (Fig.-c):
Islanding with sheet pile cofferdam is resorted to when wells are sited inside river where the depth of water is considerable and bullah pile cofferdams are unsuitable for resisting the pressure of the filled up earth inside the cofferdam. The sheet pile cofferdams are stiffened with circular ring stiffeners.

(d) Floating Caissons (Fig. -d):
In very deep water, the sheet pile cofferdam is not a solution because the hoop tension developed due to the earth pressure of the filling material is tremendous. In such cases, floating caissons are usually employed. The well curb and the steining arc made up to certain height with steel sheets braced inside with proper bracings.

The space between the inside and outside surface is kept void. The caisson is floated and brought to the actual location. The “launching” of the caisson is done by filling the annular void space with concrete in stages.

Before concrete filling, the caisson is carefully centered at its correct position. Due to the weight of the filled up concrete, the caisson goes down slowly and ultimately it touches the bed and it is grounded. The sinking is done as usual by building steining over the caisson and dredging.

The grounding of the caisson in correct position sometimes may not be possible specially in high velocity rivers. In such cases, the caissons are refloated by pumping the water kept either in some cells of the multi-cell wells or in water tanks ova the caissons and then re-grounded in correct position.

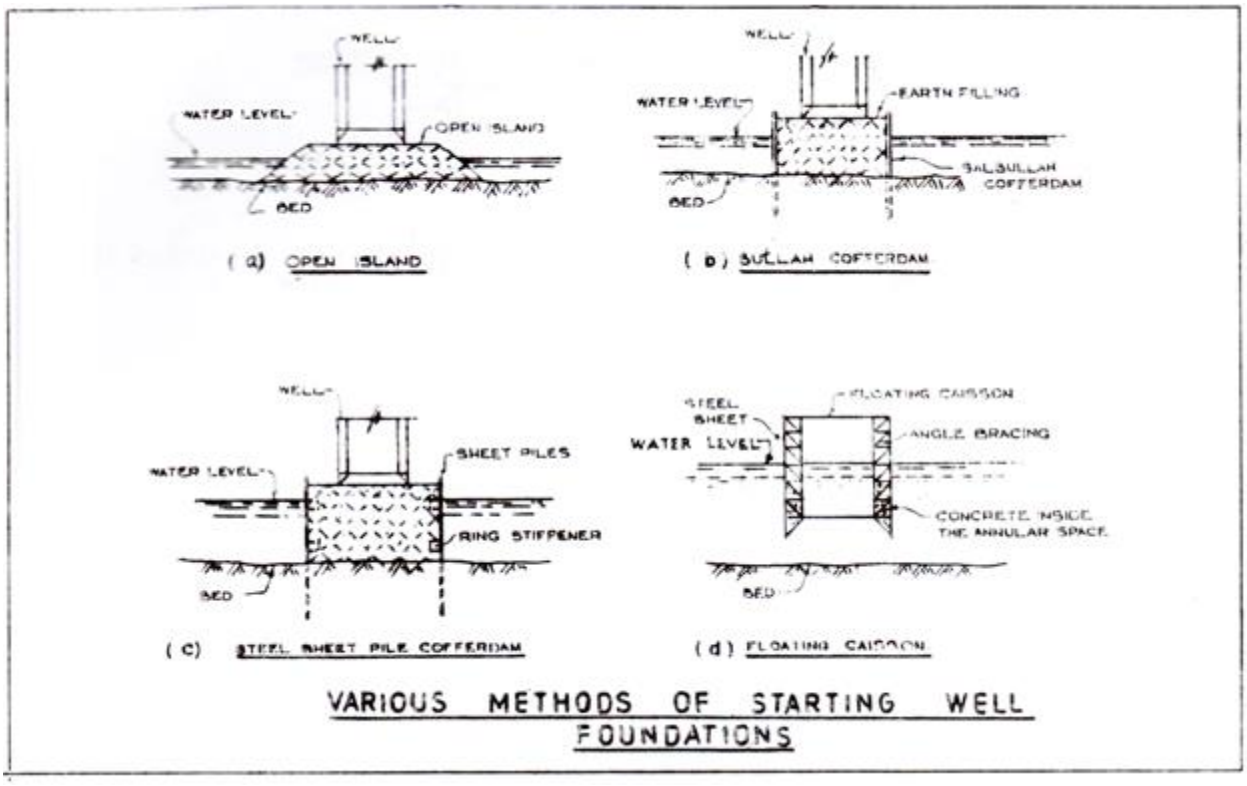

Method of Sinking:

Open Sinking:

Wells may be sunk by the open sinking (Fig.-a) or the pneumatic sinking method (Fig. 21.25-b) In the former method the earth, sand, loose gravels etc. are removed from the bottom level of the cutting edge by means of grabbing or dredging and the well goes down due to its own weight.

If me steining is lighter or if the skin-friction round the periphery of the well steining is greater, additional knetledge load may have to be applied to facilitate the sinking.

Air-jetting near the cutting edge or water-jetting on the outside of the well-curb is resorted to when the well is stuck to a layer of stiff clay and it is found extremely difficult to sink the well further in spite of creating a deep sump under the cutting edge or placing a heavy kentledge on the well.

If the jet-pipes are laid in sections as shown in Fig.(b) with one 100 mm diameter vertical pipe connected to 3 nos. 50 mm dia jet-pipes through a 100 mm dia horizontal pipe, these also help in rectifying the tilt since any one section situated on the high side can be utilised to loosen the friction on that side. Alternate chiseling and dredging yield results in sinking wells in hard strata.

Sometimes, the wells are partially dewatered to loosen the skin friction or to puncture the stiff layer-of clay but it may be remembered that dewatering of the well is a very risky process since

the well may; sink suddenly, which may lead to the heavy tilts and shifts or may cause cracks in the steining.

Therefore, dewatering of the wells should not normally be attempted unless forced by circumstances. If dewatering is to be done at all, it should be done very slowly and carefully to avoid any awkward situation.

Pneumatic Sinking:
Where open well sinking is likely to face many difficulties such as the presence of very hard stratum, loose boulders, inclined rock etc. or where the well is to be sunk some distance into rock, pneumatic sinking is adopted, in this method, a steel or a concrete air-lock is used at the bottom of the veil Compressed air pumped inside the air-lock displaces the water and workmen can work inside the air-lock without any difficulty.

Two separate locks known as the man-lock and the muck-lock are provided at the top of wells. These are connected to the air-lock at bottom by means of an air-shaft and the work-men, tools and plant and the excavated materials are taken in or out through these man-lock or the muck-lock.

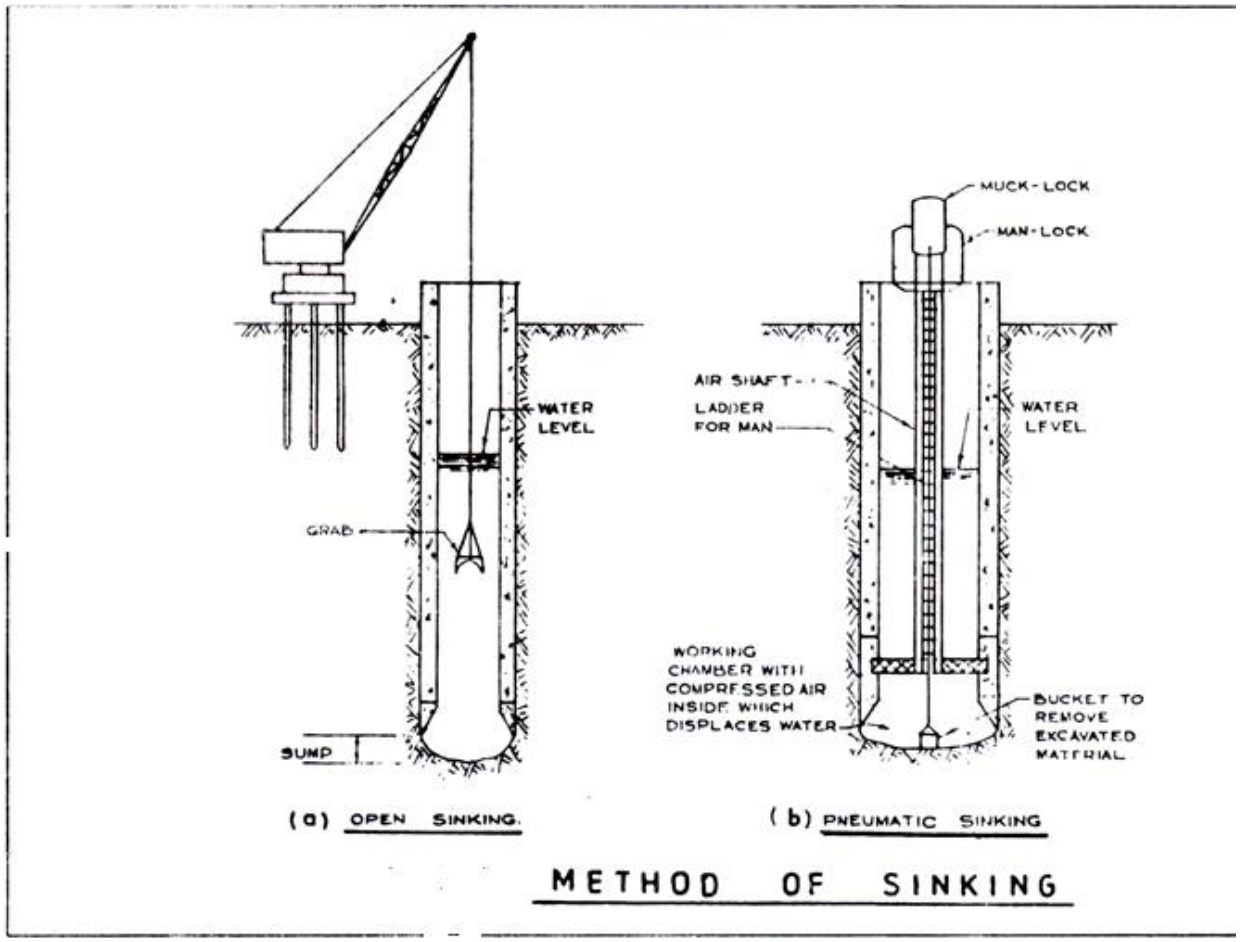

Provision for the installation of the pneumatic sinking should be made in cases where open sinking may normally serve the purposes but the possibility of sinking hazards are there and the pneumatic sinking may have to be resorted to. Normally, pneumatic sinking is more costly than the open sinking.

The ratio of the cost depends on the difficulty or otherwise of the open sinking method. It is roughly estimated that pneumatic sinking is two times expensive than the open sinking when the sinking conditions of the latter one are very favourable or moderately favourable.

The former one may even be cheaper when the sinking by the latter method may have to face too many difficulties and the work is to be continued for a longer period under most adverse conditions.

Cofferdam

A **cofferdam**, also called a **coffer**[1], is an enclosure built within, or in pairs across, a body of water to allow the enclosed area to be pumped out.[2] This pumping creates a dry working environment so that the work can be carried out safely. Enclosed coffers are commonly used for construction or repair of permanent dams, oil platforms, bridge piers, etc., built within or over water.

These cofferdams are usually welded steel structures, with components consisting of sheet piles, wales, and cross braces. Such structures are usually dismantled after the construction work is completed.

Types of Cofferdams

There are many types of cofferdams. A cofferdam is defined as a temporary barrier in or around a body of water which allows the process of de-watering, diversion, or damming of water within an enclosed area. The major purpose of any cofferdam type is to hold back overwhelming or inconvenient waters and create a dry work environment. This allows a project to proceed with as little resistance and as much safety as possible.

A Dam-It Dams cofferdam holds back water to create a temporary barrier around a project site.

<u>Cofferdams</u> usually fall into these categories:

- Cantilever Sheet Pile Cofferdam
- Braced Cofferdam
- Earth Embankment Cofferdam
- Rock fill Cofferdam
- Double Wall Cofferdam
- Cellular Cofferdam

Cantilever Sheet Piles

This type of cofferdam is susceptible to leakage and flood damage, making these forms of damming better suited for smaller depths of water, up to 18 feet. They can be constructed of wood, concrete, or steel, each with their own size limitations in what they can handle. Wooden sheet pile cofferdam is suitable for up to 9 feet, steel sheet pile is suited up to 18 feet head of water, similar to concrete, which suitable when headroom is limited. They are bored and cast in place and are to be used to avoid noise and vibration.

Earth Embankment

This type of cofferdam is suitable for high heads of water with low velocity. A successful cofferdam does not need to be completely watertight because some seepage of water into the excavation is usually well-tolerated. The water collected is pumped out of the excavation afterwards. The embankment is provided with a free board minimum of 3 feet to prevent overtopping by waves. This type of cofferdam requires large base area and is adopted when an area of excavation is very large. Clay soil is appropriate for the construction in dry season. If constructed in wet season, sand fill is the best material.

Rock-fill Embankment

This cofferdam type is made of rock-fill. A typical section rock-fill cofferdam is better than the earth fill. These are very pervious and are usually provided with an impermeable membrane of soil to reduce seepage. The crest and upper part of impermeable membrane are provided with a rap to protect against the wave action.

Double-Wall sheet piles

This type of cofferdam is suitable when it is required to exclude water over 36 feet. This consists of two straight, parallel vertical wall of sheet piling tied to each other and the space between them filled with soil. Double-Wall sheet pile cofferdam higher than 7.5 feet should be strutted. Sometimes an inside berm is provided. Consequently, this helps to keep the phreatic surface within the berm.

Cellular Cofferdams

A cellular cofferdam is constructed by driving sheet piles of special shapes to form a series of cells. The cells are interconnected to form a watertight wall. These are filled with soils and, as a result, provide stability against the lateral forces. There are two types of cellular cofferdams, namely diaphragm type and circular type.

Questions

1. Define bridge foundation and briefly explain different types of foundation in bridge engineering?
2. Explain the procedure of pile foundation.
3. **Define coffer dam and its use.**

References:

i) Engineering by S.P. Bindra

ii) https://www.sciencedirect.com/topics/engineering/masonry-bridges

iii) https://civildigital.com/bridges-definition-types-of-bridges-steel-bridges-classification-of-bridge/

iv) https://www.concretecentre.com/Sectors/Infrastructure/Bridges-waiting/Bridge-Types.aspx